Wide Input Range CC/CV Step Down Converter

❖ GENERAL DESCRIPTION

The AX3055 is a step down PWM converter with a driving dual output current to 4.8A. It is designed to allow for operating a wide supply voltage range from 8V to 40V. The external shutdown function can be controlled by logic level to pull COMP pin down, and then comes into standby mode. The external compensation makes feedback control have good line and load regulation with flexible external design.

The AX3055 operates in the CC (Constant output Current) mode or CV (Constant output Voltage) mode, and the OCP current value is set by current sensing resisters.

The AX3055 is suitable for the DC/DC switching power applications when requested the current limit function. The devices are available in QFN5*5-20L package and require very few external devices for operation.

❖ FEATURES

- V_{IN} Operate with 8V ~ 40V Supply Voltage
- V_{OUT} Accuracy (V_{REF} =1.0V) ±1.0%
- Dual-Channeling CC/CV Mode Control
- External Current Limit Setting for 2 channel
- Thermal, Over voltage and Short Circuit Protection
- Internal Soft Start ~ 3ms
- Fixed Frequency 120KHz
- UVLO Protection (min=7V, typ=7.5V, max=8V)
- Duty Cycle Range (0~93%)
- Single Pin to External Compensation and Shutdown Control
- C_{OUT} MLCC support.
- Built in Adjustable Cable-Compensation
- QFN5*5-20L Package
- RoHS and Halogen free compliance

❖ APPLICATION

- Car Charger
- High-Brightness Lighting
- Portable Charger Devices
- General-Purpose DC/DC Controller with Current Limit

Axelite Confidential Materials, do not copy or distribute without written consent.

❖ BLOCK DIAGRAM

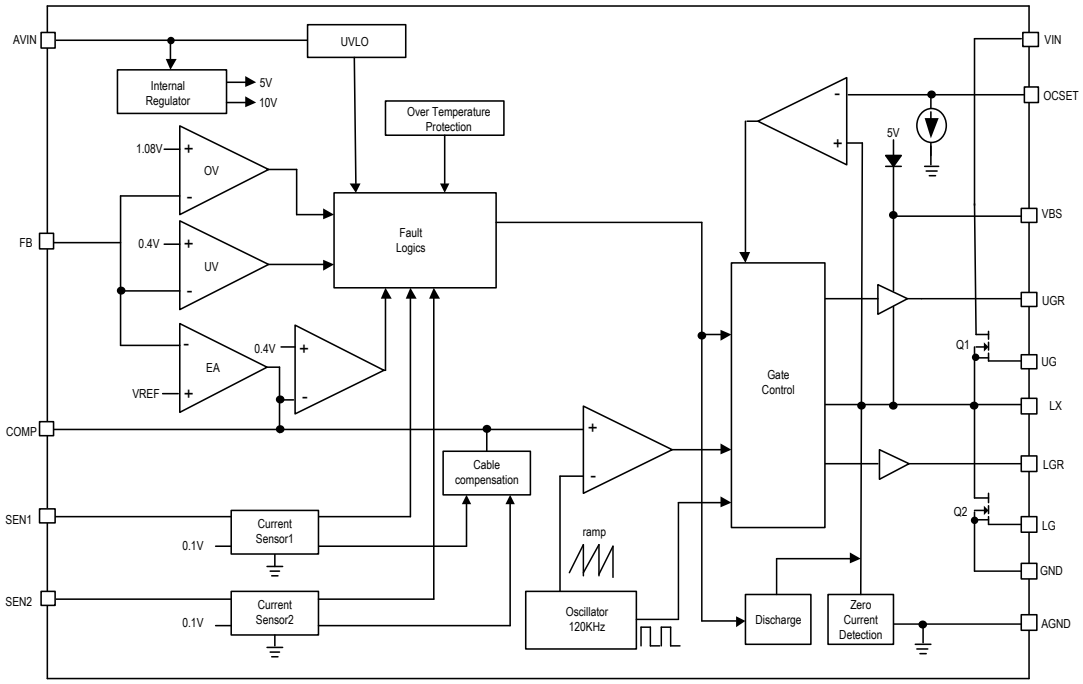

❖ PIN ASSIGNMENT

The package of AX3055 is QFN5*5-20L the pin assignment is given by:

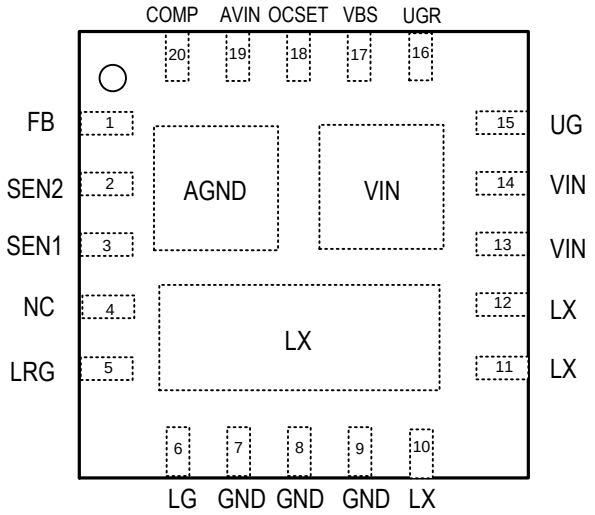

Axelite Confidential Materials, do not copy or distribute without written consent.

Name	Description
VIN	Power Supply Input. Bypass this pin with a 2.2uF ceramic capacitor to GND, placed as close to the IC as possible.
COMP	Error Amplifier Output. This is the output of the error amplifier (EA) and the non-inverting input of the PWM comparator. Use this pin in combination with the FB pin to compensate the voltage control feedback loop of the converter. Pulling COMP to a level below 0.4V nominal disables the controller, causes the oscillator to stop, and makes the UGATE and LGATE outputs held low.
FB	Feedback Pin. The voltage at this pin is regulated to 1.0V. Connect to the resistor divider between output and GND to set the output voltage.
SEN2	The Current Sense Input2 Pin. When the SEN2 is larger than the current sense voltage, OCP function will enable.
SEN1	The Current Sense Input1 Pin. When the SEN1 is larger than the current sense voltage, OCP function will enable.
GND	Ground. Connect this pin to a large PCB copper area for best heat dissipation, Return FB, and COMP to this GND and connect this GND to power GND at a single point for best noise immunity.
LG	Low-side Mosfet Gate pin
LGR	Through the resistance to contact with LG pin, Control Q2 sink/source capability
UG	High-side Mosfet Gate pin
UGR	Through the resistance to contact with UG pin, Control Q1 sink/source capability
LX	Power Switching Output to External Inductor.
BS	Bootstrap Pin. This provides power to the internal higher MOSFET gate driver. Connect a 100nF capacitor from BS pin to LX pin.
OCSET	Setting of Over-Current limit threshold (High-side MOS Current detect)

❖ ORDER/MARKING INFORMATION

Order Information	Top Marking(QFN5*5-20L)
AX3055 X XXXX X Blank:120KHz Package Type TQ20:QFN5*5-20L Packing Blank : Tube A : Taping	Logo ← AX3055 → Part number YYWWX → ID code: internal WW: 01~52 Year: 11=2011 12=2012 ⋮ 19=2019

Axelite Confidential Materials, do not copy or distribute without written consent.

❖ ABSOLUTE MAXIMUM RATINGS (at T_A = 25°C)

Characteristics	Symbol	Rating	Unit
Supply Input Voltage,OCSET	V_{IN}	-0.3 to +43	V
BS to LX		-0.3 to +7	V
LX to GND	V_{SW}	-1 to +V_{IN}+1	V
BS, UG, UGR to GND		V_{SW}-0.3 to V_{SW}+7	V
FB, COMP, LG, LGR, SEN1, SEN2 to GND		0.3 to +7	V
ESD HBM (Human Body Mode)		±2K	V
ESD MM (Machine Mode)		±200	V
Power Dissipation, PD @T_A=25°C	P_D	(T_J-T_A) / θ_{JA}	mW
Thermal Resistance from Junction to case	θ_{JC}	5	°C/W
Thermal Resistance from Junction to ambient	θ_{JA}	36	°C/W

❖ RECOMMENDED OPERATION CONDITIONS

Characteristics	Symbol	Rating	Unit
Storage Temperature Range	T_{ST}	-65 to +150	°C
Junction Temperature	T_J	-40 to +125	°C
Operating Temperature	T_{OP}	-40 to +85	°C
Temperature Range(Soldering 10sec)		260	°C

Note 1: Stresses listed as the above “Absolute Maximum Ratings” may cause permanent damage to the device. These are for stress ratings. Functional operation of the device at these or any other conditions beyond those indicated in the operational sections of the specifications is not implied. Exposure to absolute maximum rating conditions for extended periods may remain possibility to affect device reliability.

Note 2: Devices are ESD sensitive. Handling precaution recommended.

Note 3: θ_{JA} is measured in the natural convection at T_A = 25°C on a high effective thermal conductivity test board of JEDEC 51-7 thermal measurement standard.

Axelite Confidential Materials, do not copy or distribute without written consent.

❖ ELECTRICAL CHARACTERISTICS V_{CC}=12V, T_A=25°C (unless otherwise specified.)

Characteristics		Symbol	Test Conditions	Min	Typ	Max	Units
Supply Voltage Range V_{IN}		V_{CC}		8	-	40	V
Supply Input Current		I_{CCQ}	COMP/EN=GND	-	800	-	uA
		I_{CC}	$12V_{IN}$ V_{OUT}=5V,No load	-	1.4	-	mA
		I_{CC}	$30V_{IN}$ V_{OUT}=5V,No load	-	1.4	-	mA
Power-On-Reset							
VIN POR Threshold		V_{INRTH}	V_{IN} Rising.	7	7.5	8	V
		V_{INFTH}	V_{IN} Falling.	-	6.5	-	
Oscillator							
Normal PWM Frequency	AX3055	F_{OSC}	I_{OUT}=200mA	96	120	144	KHz
Minimum On-Time		T_{ON-MIN}		-	200	-	nS
Duty Cycle Range	AX3055	Duty		0	-	93	%
Reference							
Reference Voltage		V_{REF}		-	1.0	-	V
Reference Voltage Tolerance				-1	-	+1	%
Cable compensation Current		I_{FB}	V_{SEN1} or V_{SEN2} =100mV	4.25	5	5.75	uA
Power Switches							
High-side Switch (Q1) Resistance		$R_{Q1,DSON}$		-	17	-	mΩ
Low-side Switch (Q2) Resistance		$R_{Q2,DSON}$		-	12	-	mΩ
PWM Error Amplifier							
COMP Shutdown Threshold Voltage				-	0.4	-	V
COMP Source Current			V_{COMP}=V_{COMP_H} -1V	-	200	-	uA
COMP Sink Current			V_{COMP}=1V	-	200	-	uA
Current Sense Amplifier							
SEN1/SEN2 OCP Threshold		V_{SEN}		95	100	105	mV
Secondary High-Side(Q1) Peak Current limit							
OCSET Current Sink		I_{OCSET}	RSEN=0mΩ, NO CC	160	200	240	uA
Pre-Driver (Ensured by design)							
Protection							
Over Temperature Shutdown				-	160	-	°C
Over Temperature Hysteresis				-	40	-	°C
Soft Start							
Soft Start Time		T_{SS}		-	3	-	ms
Recycle Time				-	0.5	-	s
Output Short Circuit Protect Section							
Short Circuit Fold Back Voltage		V_{SCP}		-	0.4	-	V

Axelite Confidential Materials, do not copy or distribute without written consent.

❖ TYPICAL APPLICATION CIRCUIT

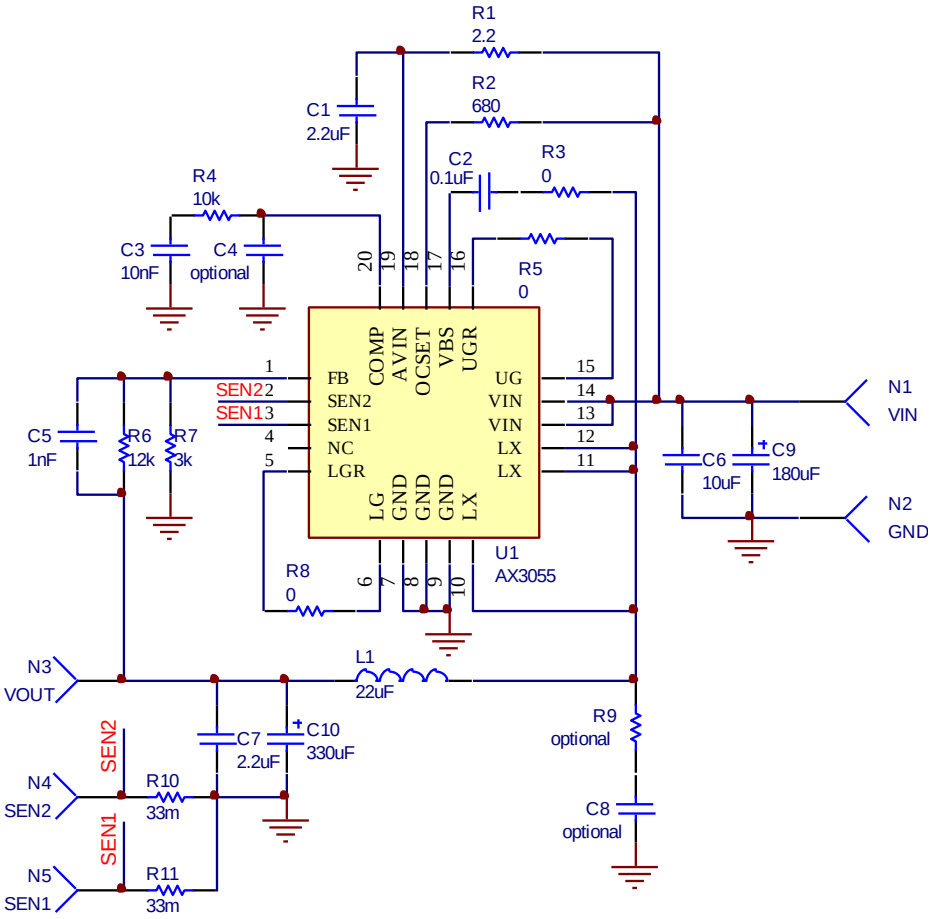

Axelite Confidential Materials, do not copy or distribute without written consent.

❖ FUNCTION DESCRIPTIONS

CC/CV Mode Control

The AX3055 provides CC/CV function. The Constant output Current control Mode and Constant output Voltage control Mode.

Over Current Protection

The AX3055 provides over current protection. A drop voltage on the current sensing resister is over the OCP value, the OCP function will shut down the controller.

Soft Start

The AX3055 has internal soft start function to control rise rate of the output voltage and limits the large inrush current at start up. The typical soft start interval is about 3mS.

Power on Reset

A power-on reset circuit monitors the input voltage. When the input voltage exceeds 7.5V, the converter will start operation. Once input voltage falls below 6.5V, the controller will shut down.

Over Temperature Protection

The AX3055 provides over temperature protection. The OTP will shut down the converter when junction temperature exceeds 160°C. Once the junction temperature cools down by approximately 40°C, the converter will resume normal operation.

Current Limit Protection

The Current limit is set by outside resistance (R_{SENSE}), When the SEN1 or SEN2 voltage larger than 100mV, the current limit is happened that driver can be turned off. The current limit set according to the following equation:

$$\text{Current Limit (A)} = \frac{100\text{mV}}{R_{SENSE}}$$

Output Short-Circuit Protection

The AX3055 provides output short-circuit protection function. When V_{OUT} is short (V_{FB}<0.4V), the auto restart function can be started that restart the regulator cycle by cycle. The cycle time is set by internal counter.

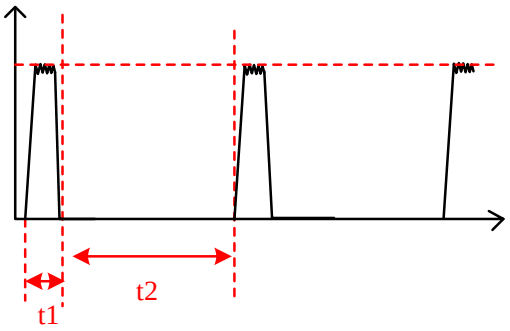

$$t1 = 18m(Sec.)$$
$$t2 = 550m(Sec.)$$

Axelite Confidential Materials, do not copy or distribute without written consent.

Over Voltage Protection

The AX3055 monitor FB Voltage to detect over voltage. The over voltage feature minimizes output overshoot by turning off high-side(Q1)/low-side(Q2) MOSFET and turning on discharge circuit (100mA) when FB voltage reaches to the rising OVP threshold which is nominally 108% of the internal voltage reference.

Output Cable Resistance Compensation

To compensate for resistive voltage drop across the charger's output cable, the AX3055 integrates a simple, user-programmable cable voltage drop compensation using the impedance at the FB pin. Use the curve in Figure 2 to choose the proper feedback resistance values for cable compensation. R_{FB1} is the high side resistor of voltage divider. The Vsen1 or Vsen2 take the big one.

$$V_{OUT} = [(1+\frac{R_{FB1}}{R_{FB2}})\times V_{FB}]+[R_{FB1}\times(\frac{V_{SEN}}{18K}-0.55uA)]$$

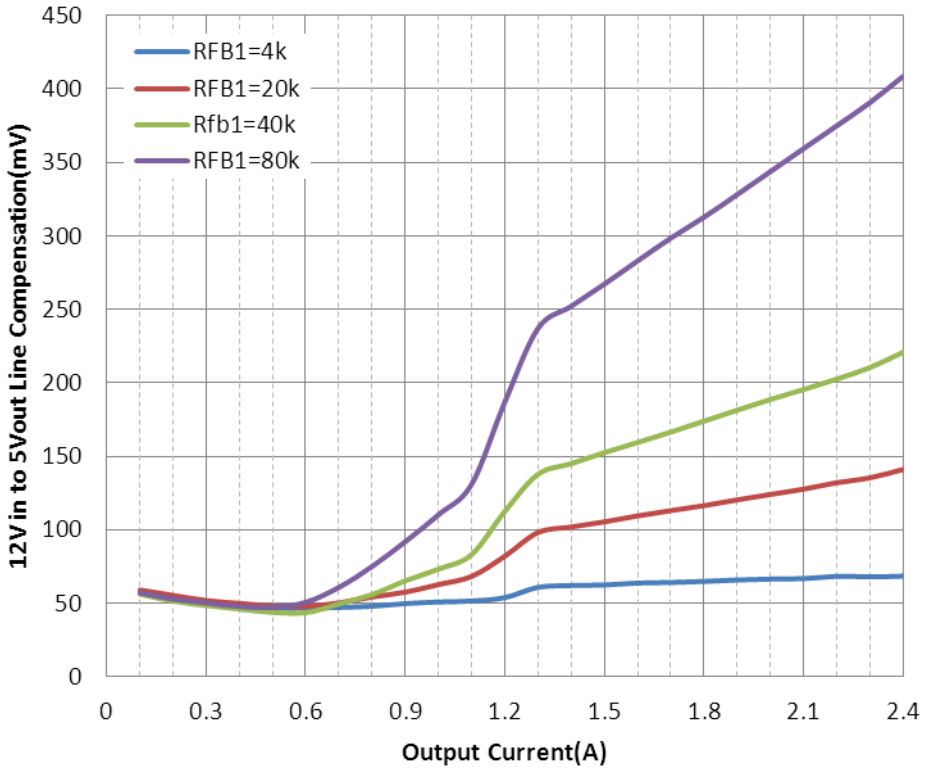

Figure2 12Vin to 5Vout Cable Compensation **(**RSEN= 33mΩ)

High Side MOSFET (Q1) Peak Current Limit

A resistor (R_{OCSET}) connect from OCSET pin to the drain of the high side MOSFET (Q1), An 250ns blanking time is used to avoid the current sampling error due to turn on switching noise.

OCP function monitors the High-Side MOSFET (Q1) voltage and the OCSET pin to set the over-current trigger threshold, The Q1 Peak Current Limit (I_{Q1_OCP}) value can be calculated through:

$$I_{Q1_OCP} = \frac{I_{OCSET} * R_{OCSET}}{R_{ON}(Q1)}$$

Axelite Confidential Materials, do not copy or distribute without written consent.

❖ APPLICATION INFORMATION

Output Voltage Setting

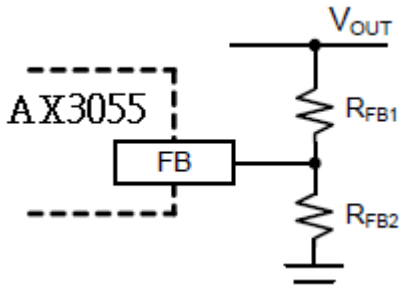

Figure1 Output Voltage Setting

Figure 1 shows the connections for setting the output voltage. Select the proper ratio of the two feedback resistors R_{FB1} and R_{FB2} based on the output voltage. Typically, use $R_{FB2} \approx 1k\Omega$ and determine R_{FB1} from the following equation:

$$R_{FB1} = R_{FB2}(\frac{V_{OUT}}{V_{FB}} - 1)$$

Inductor Selection

The inductor maintains a continuous current to the output load. This inductor current has a ripple that is dependent on the inductance value:

Higher inductance reduces the peak-to-peak ripple current. The tradeoff for high inductance value is the increase in inductor core size and series resistance, and the reduction in current handling capability. In general, select an inductance value L based on ripple current requirement:

$$L = \frac{V_{OUT} \times (V_{IN} - V_{OUT})}{V_{IN} f_{LX} I_{OUTMAX} K_{RIPPLE}}$$

where V_{IN} is the input voltage, V_{OUT} is the output voltage, f_{LX} is the switching frequency, I_{OUTMAX} is the maximum output current, and K_{RIPPLE} is the ripple factor. Typically, choose K_{RIPPLE} = 30% to correspond to the peak-to-peak ripple current being 30% of the maximum output current.

With this inductor value, the peak inductor current is $I_{OUT} \times (1 + K_{RIPPLE}/2)$. Make sure that this peak inductor current is less than the controller's current limit. Finally, select the inductor core size so that it does not saturate at the peak inductor current.

Input Capacitor

The input capacitor needs to be carefully selected to maintain sufficiently low ripple at the supply input of the converter. A low ESR capacitor is highly recommended. Since large current flows in and out of this capacitor during switching, its ESR also affects efficiency.

The input capacitance needs to be higher than 100μF. The best choice is the ceramic type, however, low ESR tantalum or electrolytic types may also be used provided that the RMS ripple current rating is higher than 50% of the output current. The input capacitor should be placed close to the VIN and GND pins of the IC, with the shortest traces possible. In the case of tantalum or electrolytic types, they can be further away if a small parallel 1μF ceramic capacitor is placed right next to the IC. Especially C8 capacitor should be placed as close as possible to the VIN pin.

Axelite Confidential Materials, do not copy or distribute without written consent.

Output Capacitor

The output capacitor also needs to have low ESR to keep low output voltage ripple. The output ripple voltage is:

$$V_{RIPPLE} = I_{OUTMAX} K_{RIPPLE} R_{ESR} + \frac{V_{IN}}{28 \times f_{LX}^{2} LC_{OUT}}$$

where I_{OUTMAX} is the maximum output current, K_{RIPPLE} is the ripple factor, R_{ESR} is the ESR of the output capacitor, f_{LX} is the switching frequency, L is the inductor value, and C_{OUT} is the output capacitance. In the case of ceramic output capacitors, R_{ESR} is very small and does not contribute to the ripple. Therefore, a lower capacitance value can be used for ceramic type. In the case of tantalum or electrolytic capacitors, the ripple is dominated by R_{ESR} multiplied by the ripple current. In that case, the output capacitor is chosen to have sufficiently low ESR.

For ceramic output capacitor, typically choose a capacitance of about 470µF. For tantalum or electrolytic capacitors, choose a capacitor with less than 50mΩ ESR.

PCB Layout Recommendations

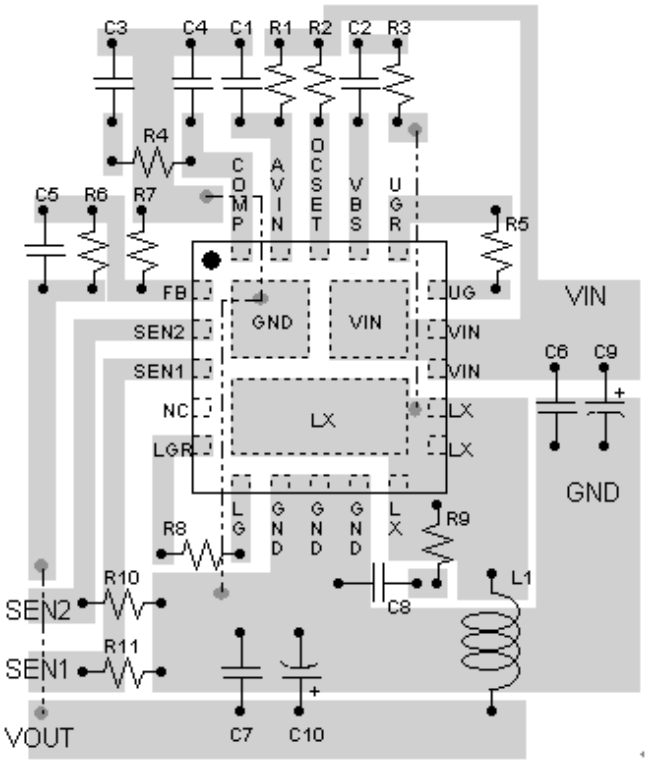

1. PCB trace defined as LX node, which connects to inductor should be as short and wide as possible.
2. All sensitive analog traces such as SEN1, SEN2, COMP, OCSET and FB should place away from high-voltage switching nodes such as LX, UG, UGR, LG or LGR nodes to avoid coupling.
3. C6 & C9 input capacitors should be placed to the VIN & GND pin as close as possible.

Axelite Confidential Materials, do not copy or distribute without written consent.

❖ TYPICAL CHARACTERISTICS

Iout vs Efficiency

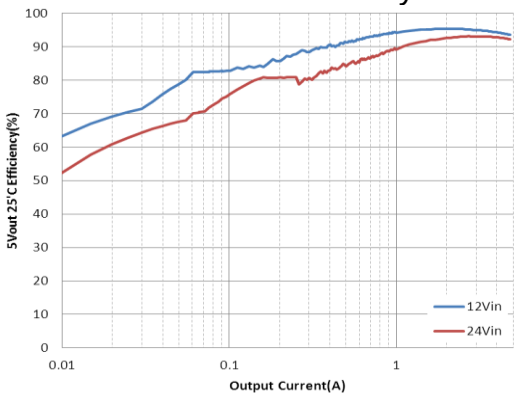

Iout vs Vout

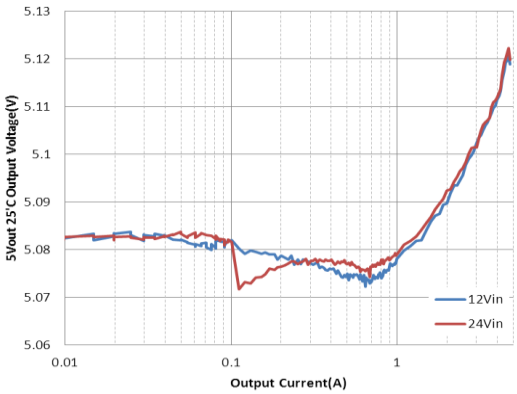

Iout vs Switching Frequency

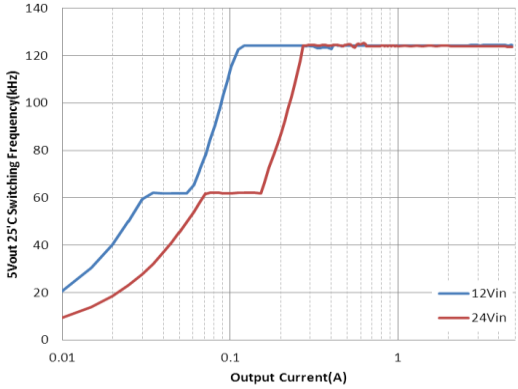

output I-V curve

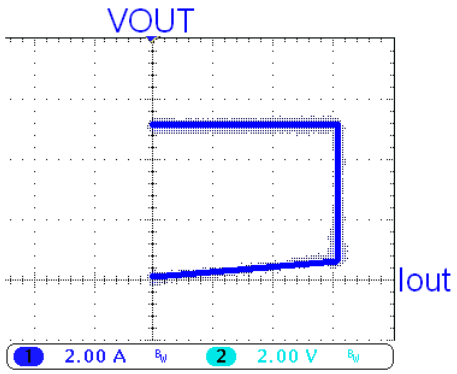

no load power on

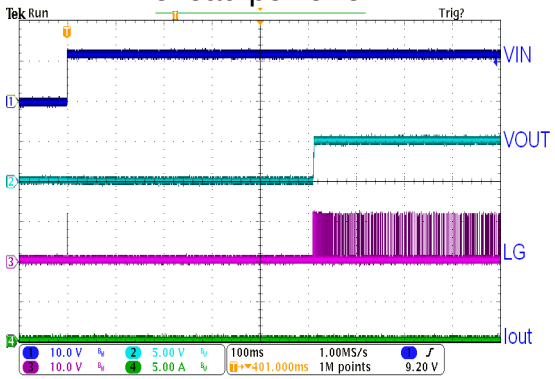

no load power off

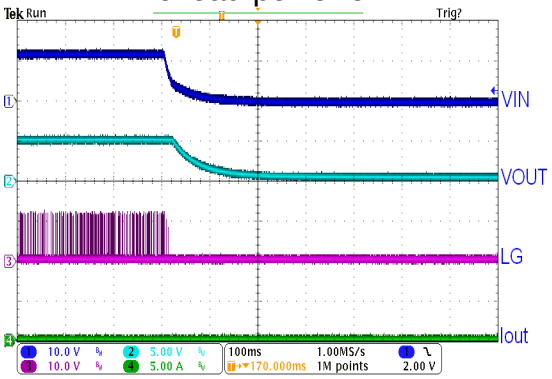

Axelite Confidential Materials, do not copy or distribute without written consent.

❖ TYPICAL CHARACTERISTICS (CONTINUOUS)

4.8A load power on

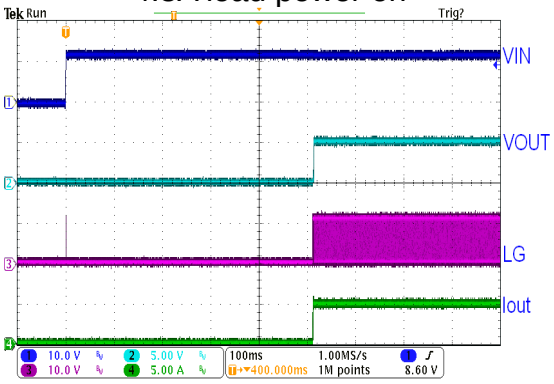

4.8A load power off

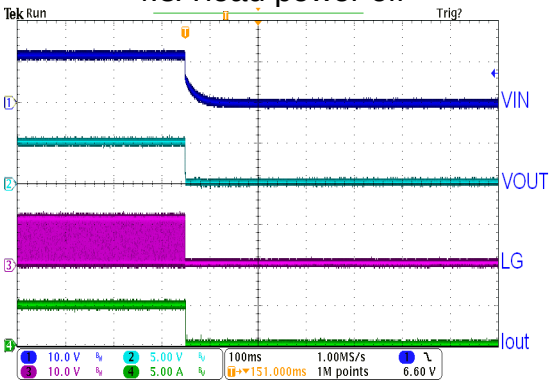

12Vin to 5Vout/4.8A load
LG falling edge dead time

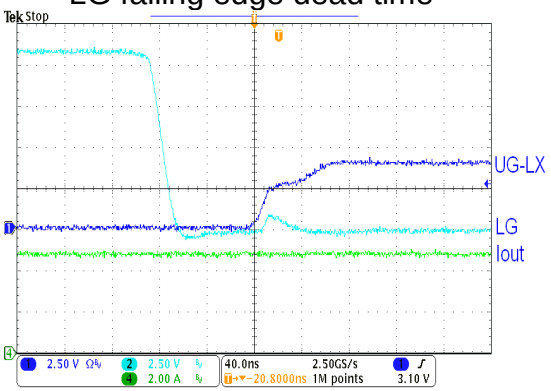

12Vin to 5Vout/4.8A load
LG rising edge dead time

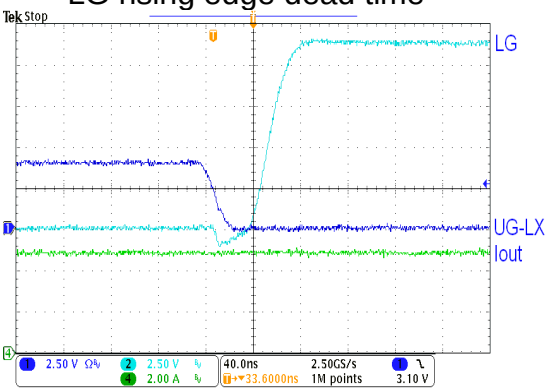

no load Vout ripple & noise

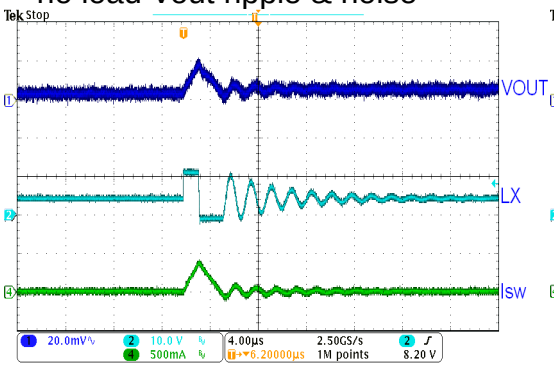

4.8A load Vout ripple & noise

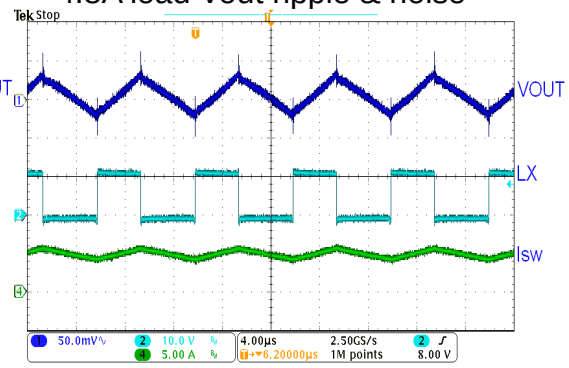

Axelite Confidential Materials, do not copy or distribute without written consent.

❖ TYPICAL CHARACTERISTICS (CONTINUOUS)

over current protection

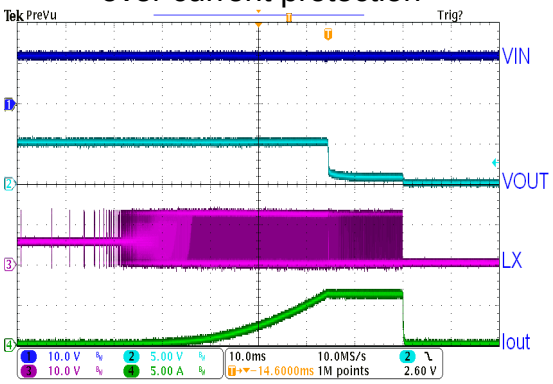

output short circuit protection

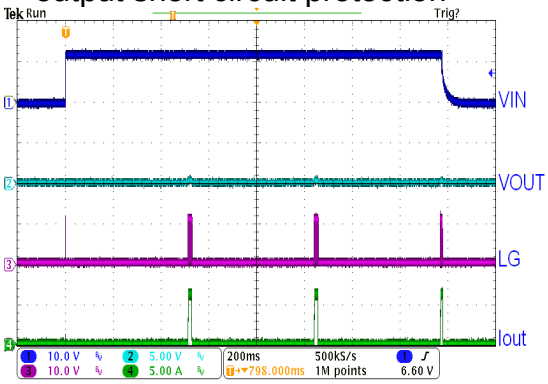

high side MOSFET peak current limit
output short circuit release

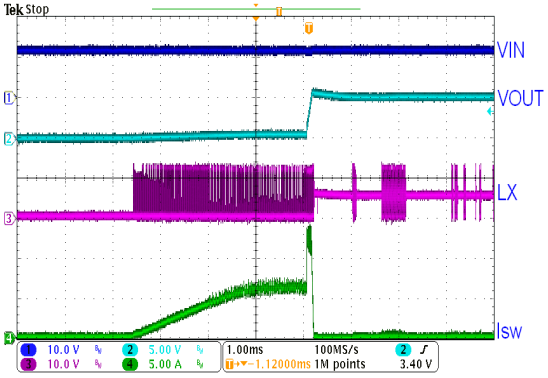

over voltage protection
20mA load

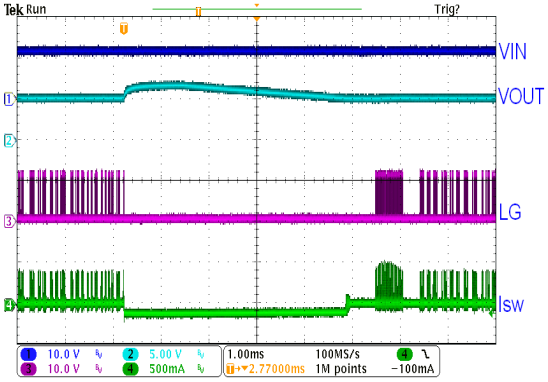

12Vin to 5Vout
1A~4.8A load transient

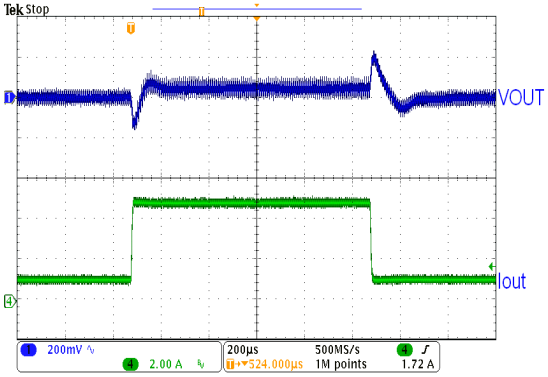

12Vin~24Vin line transient
5Vout/20mA load

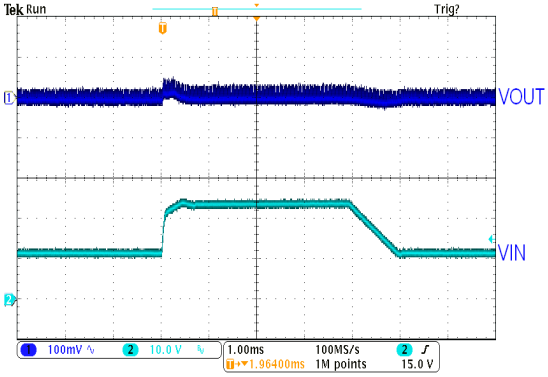

Axelite Confidential Materials, do not copy or distribute without written consent.

❖ TYPICAL CHARACTERISTICS (CONTINUOUS)

12Vin to 5Vout/4.8A load
over temperature protection

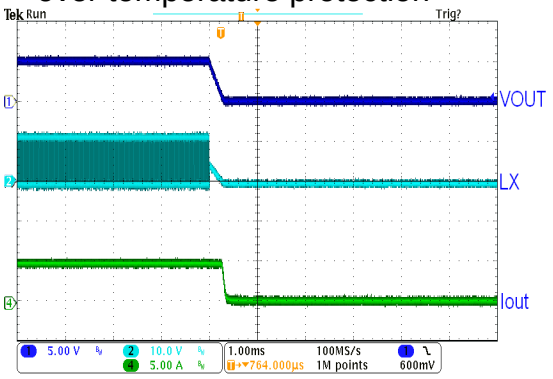

12Vin to 5Vout/4.8A load
de-OTP re-start

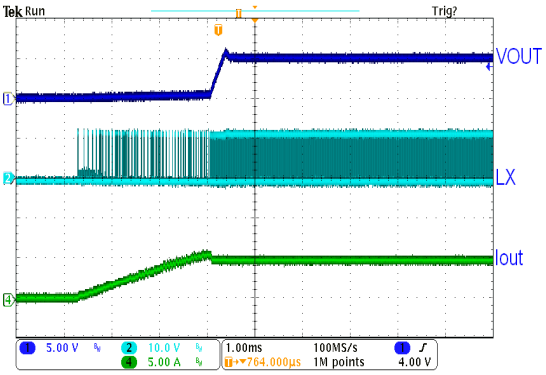

Axelite Confidential Materials, do not copy or distribute without written consent.

❖ PACKAGE OUTLINES (QFN5*5-20L)

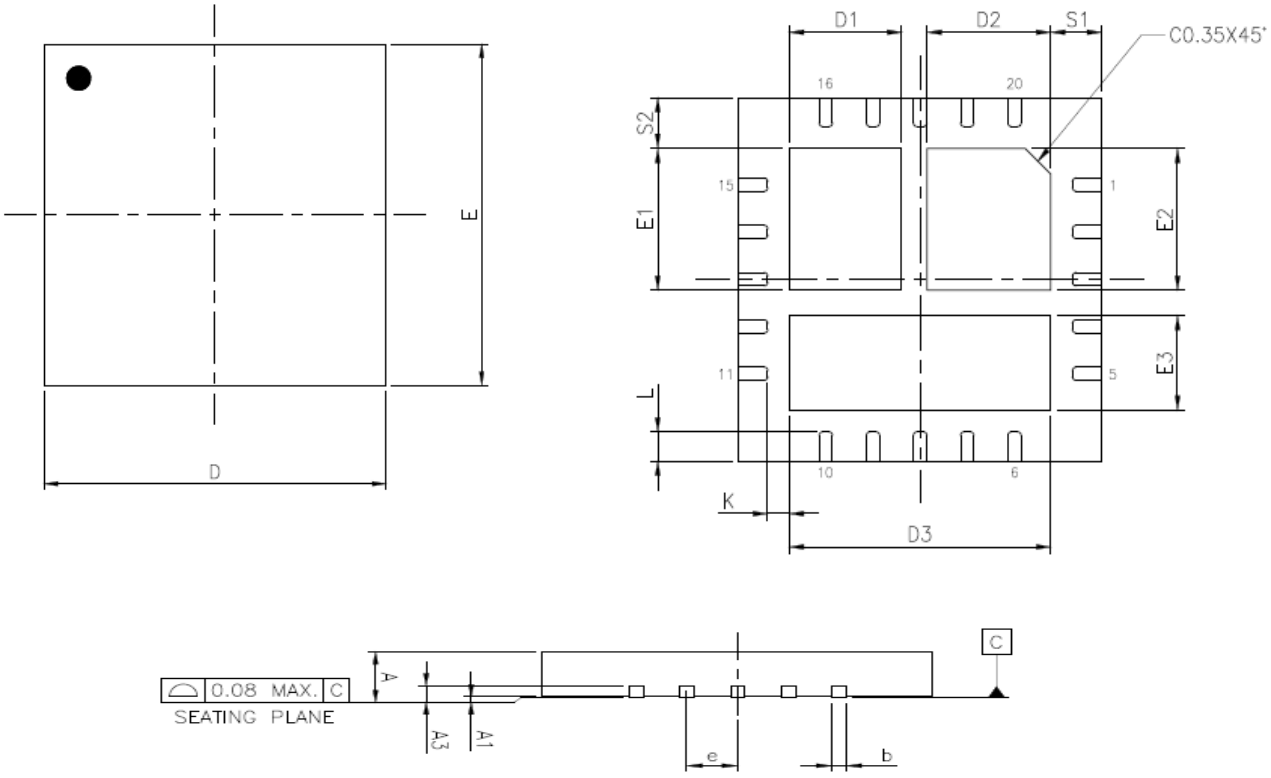

Symbol	Dimensions in Millimeters			Dimensions in Inches		
	Min.	Nom.	Max.	Min.	Nom.	Max.
A	0.70	0.75	0.80	0.028	0.030	0.031
A1	0.00	0.02	0.05	0.000	0.001	0.002
A3		0.203 REF.			0.008 REF.	
b	0.15	0.20	0.25	0.006	0.008	0.010
D		5.00 BSC			0.197 BSC.	
D1	1.50	1.55	1.60	0.059	0.061	0.063
D2	1.65	1.70	1.75	0.065	0.067	0.069
D3	3.55	3.60	3.65	0.140	0.142	0.144
E		5.00 BSC.			0.197 BSC.	
E1	1.90	1.95	2.00	0.075	0.077	0.079
E2	1.90	1.95	2.00	0.075	0.077	0.079
E3	1.25	1.30	1.35	0.049	0.051	0.053
e		0.65 BSC.			0.026 BSC.	
K	0.20	-	-	0.008	-	-
L	0.35	0.40	0.45	0.014	0.016	0.018
S1	0.65	0.70	0.75	0.026	0.028	0.030
S2	0.65	0.70	0.75	0.026	0.028	0.030

Axelite Confidential Materials, do not copy or distribute without written consent.

❖ Carrier tape dimension (QFN5*5-20L)

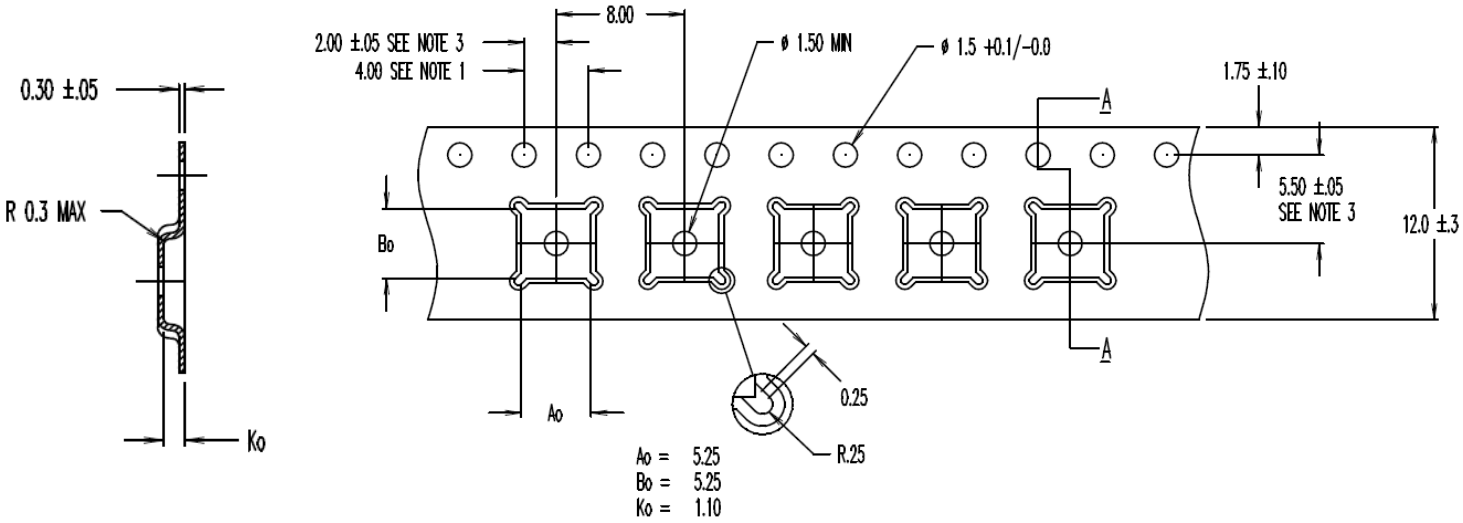

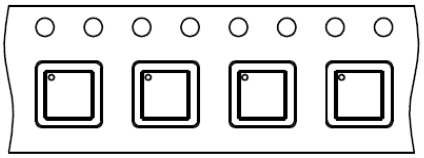

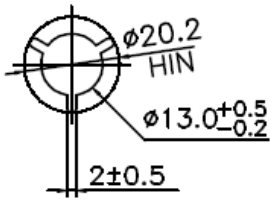

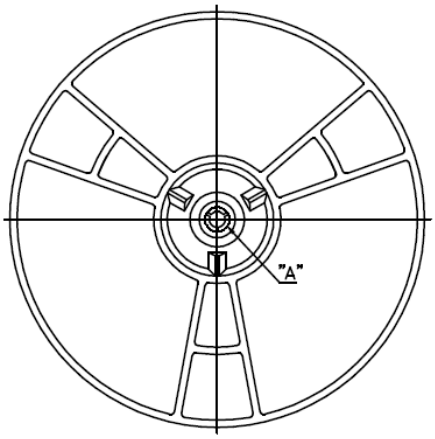

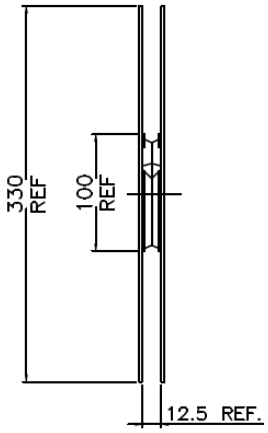

Axelite Confidential Materials, do not copy or distribute without written consent.