CC/CV Mode Step-Down Converter

DESCRIPTION

The EUP3466 is a step-down converter capable of driving 3A continuous load with excellent line and load regulation. The EUP3466 operates in either CC (Constant Current) mode or CV (Constant Voltage) mode with an input voltage range from 8V to 36V. The EUP3466 provides programmable cable compensation by adjusting external resistor divider. The EUP3466 stops switching when the output reaches over voltage threshold which is programmed by external resistor divider.

Fault protection includes secondary cycle-by-cycle current limit, short circuit protection and thermal shutdown. In shutdown mode the regulator draws 3μA of supply current. Internal soft-start minimizes the inrush supply current and the output overshoot at initial startup.

The EUP3466 is available in SOP-8 package.

FEATURES

- 8V to 36V Wide Input Operating Range
- 40V Input Voltage Surge
- Fixed 80kHz Switching Frequency
- CC/CV Mode Control
- Up to 3A Output Current
- +/- 1% Voltage Reference Accuracy
- +/- 4% Constant Current Accuracy
- Programmable Cable Compensation
- Internal Soft Start
- Output Over Voltage Protection
- Foldback Short Circuit Protection
- Secondary Cycle-by-Cycle Current Limit
- Thermal Shutdown
- Available SOP-8 Package
- RoHS Compliant and 100% Lead(Pb)-Free Halogen-Free

APPLICATIONS

- Car Charger
- Portable charger applications
- DC/DC converters with current limited

Typical Application Circuit

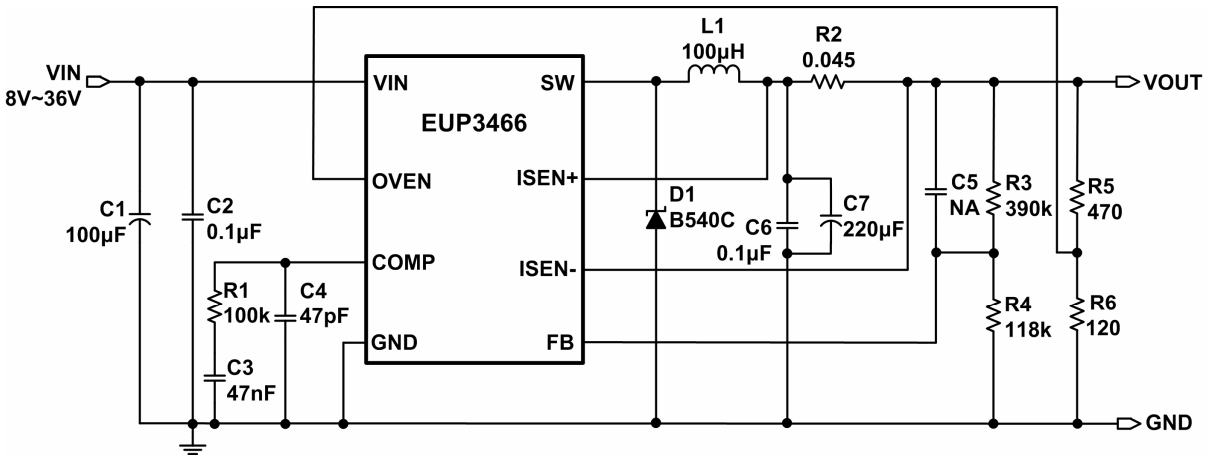

Figure 1. Application Circuit